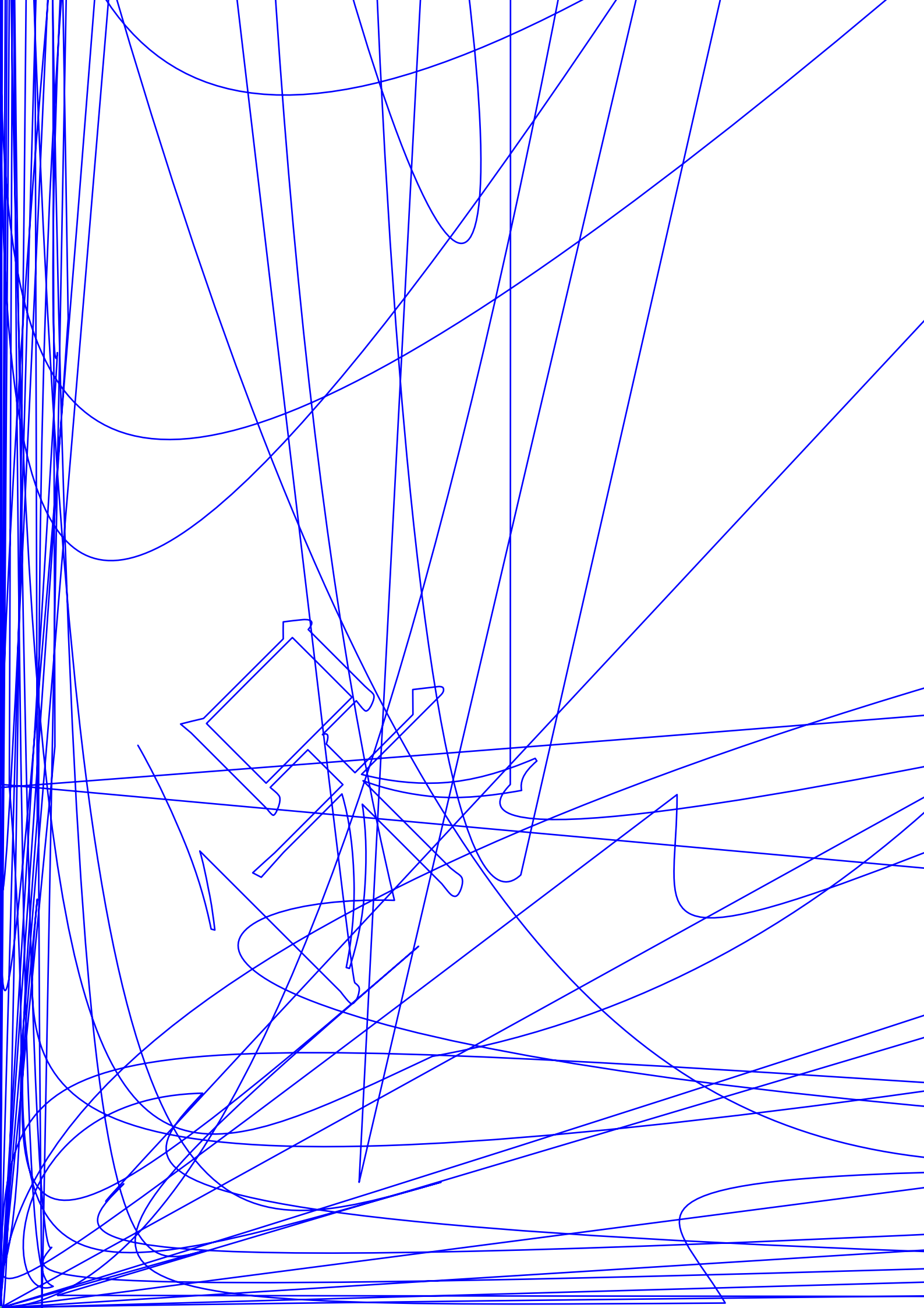

Absolute Maximum Ratings at Ta=25

Parameter	MAX.	Unit
Power Dissipation	180	mW
Continuous Forward Current	100	mA
Peak Forward Current*2	1000	mA
Reverse Voltage	5	V
Electrostatic Discharge (HBM)*3	2000	V
Moisture Sensitivity Level*1	5a	
Operating Temperature	-40℃ to + 85℃	
Storage Temperature	-40 to + 100	
IR Reflow Temperature	260 for 10 Seconds MAX.	

1. **Storage and operating:**

(1). Storage requirements before vacuum bag opened: Temperature<30℃

Electrical Optical Characteristics at Ta=25

Parameter	Symbol	Min.	Typ.	Max.	Unit	Test Condition
Radiant Intensity	Ie	1.7	2.0	---	mW/sr	I_F=20mA (Note 1,3)
Viewing Angle	$2\theta_{1/2}$	---	120	---	Deg.	(Note 2)
Peak Wavelength	λp	---	940	---	nm	I_F=20mA
Spectral Line Half- Width	△λ	---	50	---	nm	I_F=20mA
Forward Voltage	V_F	---	1.35	1.60	V	I_F=20mA
Reverse Current	I_R	---	---	10	μA	V_R=5V

Note:

1. Point sources of the amount of radiation per unit time in a given direction within the unit solid Angle radiated energy.
2. $\theta_{1/2}$ is the off-axis angle at which the Radiant Intensity is half the axial Radiant Intensity.
3. The Ie guarantee should be added 15% tolerance.

Typical Electrical / Optical Characteristics Curves
(25 Ambient Temperature Unless Otherwise Noted)

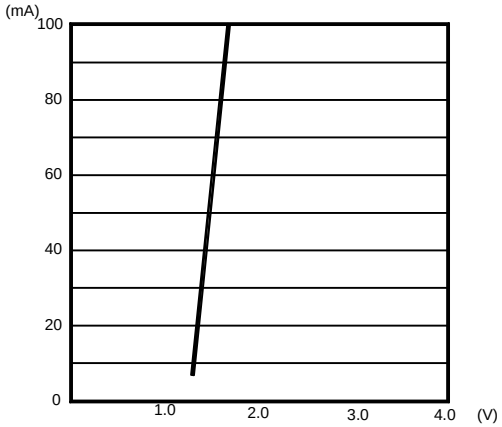

Radiant Intensity Bin Code (I_F=20mA)

BIN CODE	Min.(mW/sr)	Max. (mW/sr)
0	1.7	1.8
1	1.8	2.0
2	2.0	2.3
3	2.3	2.8

NOTE: The Ie guarantee should be added ±15% tolerance.

Carrier Tape Specifications (Loaded Quantity: 2000pcs/reel)

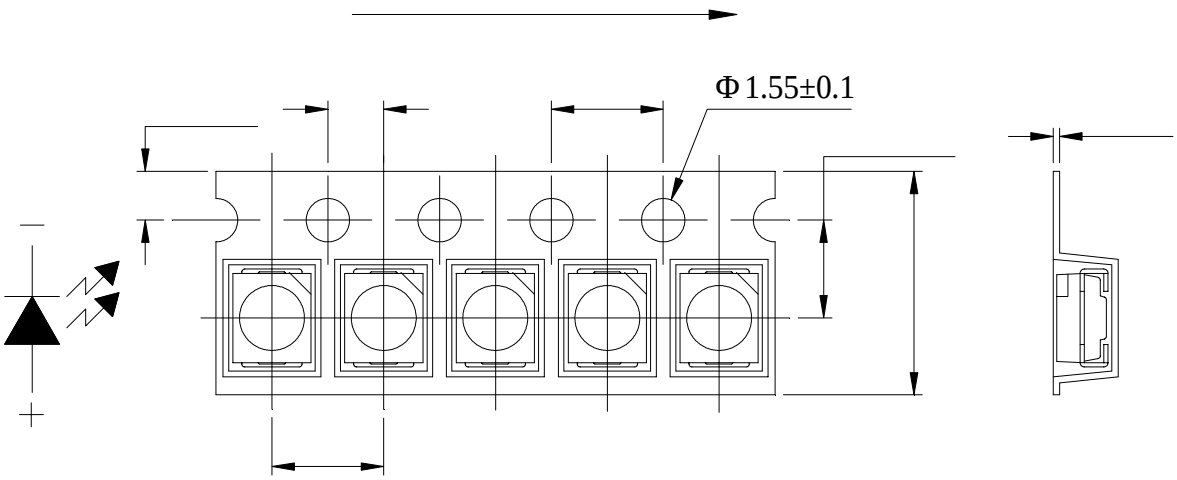

Note: Tolerance unless mentioned is ±0.1mm; Unit = mm

Moisture Resistant Packaging

Suggest IR Reflow Condition For Lead Free

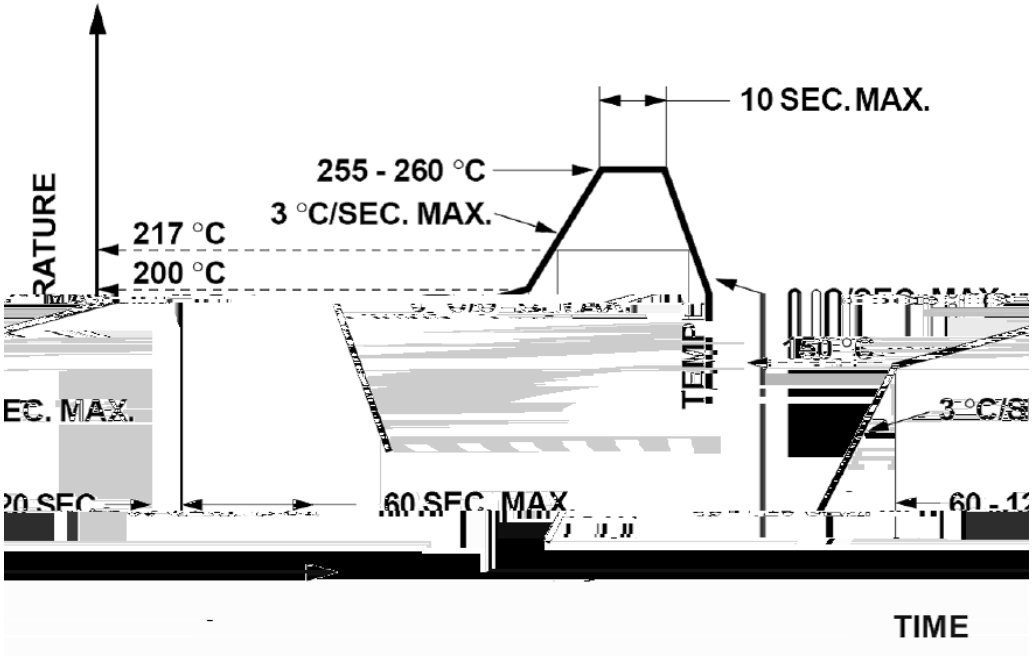

1. Reflow soldering should not be done more than two times.
2. When soldering, do not put stress on the LEDs during heating.

Soldering iron

1. When hand soldering, the temperature of the iron must less than 300 for 3 seconds.
2. The hand solder should be done only once.

Repairing

Repair should not be done after the LEDs have been soldered. When repairing is unavoidable, a double-head soldering iron should be used (as below figure). It should be confirmed beforehand whether the characteristics of LEDs will or will not be damaged by repairing.